Zareba Sensepoint

Honeywell

The Sensepoint range of flammable, toxic and oxygen gas detectors offer users a low cost solution to their gas monitoring needs.

Sensepoint

One-Stop Shop
- Flammable, toxic and oxygen versions available
- Suitable for indoor or outdoor use
- IP65 as standard

Proven Sensor Technology
- Surecell™ electrochemical sensors
- Poison resistant catalytic bead
- Fast and reliable
- Typical 2 to 5 years operational life

ATEX Certified
- Complies with the latest European standards
- Hazardous area approval AND performance
- Can be used for uncertified applications

Easy to Use
- Factory set operation
- Simple to replace
- Minimal training required

Friendly Installation
- Universal junction box
- One box, three entries
- Metric and NPT compatability
- Includes earth continuity plate for added RFI protection

Range of Accessories
- Weather Housing (IP66)
- Flow adaptor
- Duct mounting kit
- Collecting cone

The Sensepoint range of flammable, toxic and oxygen gas detectors offer users a low cost solution to their gas monitoring needs, in or out of doors and even in potentially explosive atmospheres. Supplied with a pre-wired junction box, a detector can be installed using conduit or armored cable and glands depending on individual site standards.

Sensepoint flammable and toxic gas detectors are designed for use in potentially explosive atmospheres and allow for hands free, unhindered access, to terminals via the hinged lid of the junction box. Installation should follow national guidelines using suitably approved armored cable and glands or conduit.

Supplied with earth continuity plate for improved immunity to RFI the junction box offers the installer a choice of 1/2", 3/4" and M20 connection via conduit or armored cable and Exe certified cable glands. Terminals are suitable for use with screened 0.5mm^2 (20AWG) to 2.5mm^2 (14AWG) cross sectional area cable, as needed to ensure minimum operating voltage at the detector, depending upon installed cable length.

Sensepoint flammable, toxic and oxygen gas detectors are designed for direct connection with the Zareba range of Touchpoint controllers.

Contact Honeywell Analytics for details.

Installation Details

Sensepoint flammable and toxic gas detectors allow for hands free, unhindered access, to terminals via the hinged lid of the junction box.

Supplied with earth continuity plate for improved immunity to RFI the junction box offers the installer a choice of 1/2"NPT, 3/4"NPT and M20 connection via conduit or steel wire armored cable and Exe certified cable glands.

Sensepoint flammable, toxic and oxygen gas detectors are designed for direct connection with the Zareba range of Touchpoint controllers. Contact Honeywell Analytics for details.

Dimensions

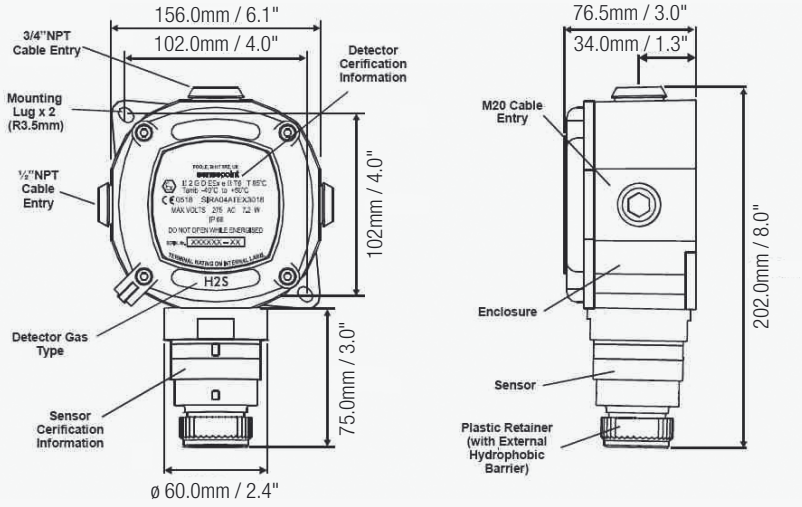

Flammable Version

Terminal Arrangement

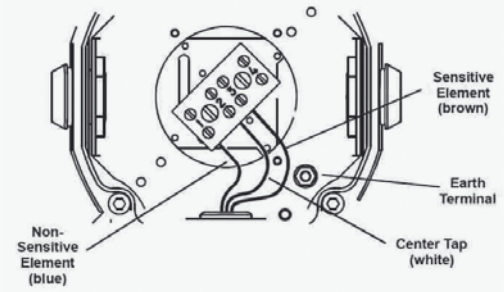

Electrical Connections

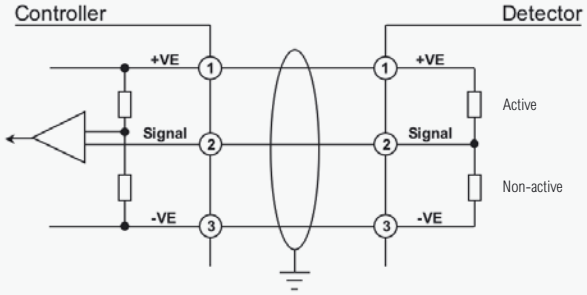

3 Wire mV Bridge Circuit

Toxic & Oxygen Version

Terminal Arrangement

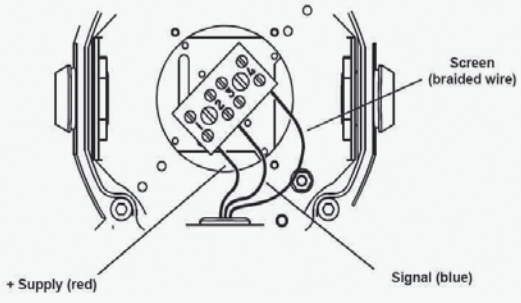

Electrical Connections

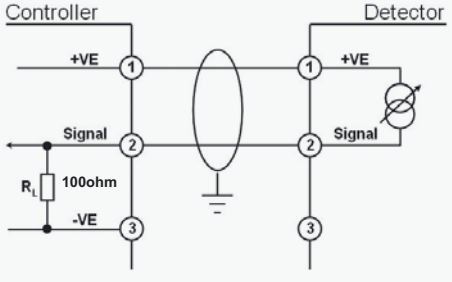

2 Wire 4-20mA (Sink)

Technical Summary

General Specification	
Use	Low cost, fixed point gas detector for the protection of personnel and plant from flammable, toxic and oxygen gas hazards

Detectable Gases

Gas		Measuring Range			Operating Temperature*	
Ident	Name	1#	2	3	Min	Max
F	Flammable	0-100% LEL			-40°C / -40°F	50°C / 122°F
O	Oxygen	0-25% VOL			-15°C / 5°F	40°C / 104°F
C	Carbon Monoxide+	0-200ppm	0-500ppm		-20°C / -4°F	50°C / 122°F
H	Hydrogen Sulfide+	0-50ppm	0-20ppm	0-100ppm	-25°C / -13°F	50°C / 122°F
G	Hydrogen	0-1000ppm			-5°C / 23°F	40°C / 104°F
L	Chlorine	0-5ppm	0-15ppm		-20°C / -4°F	50°C / 122°F
S	Sulfur Dioxide	0-15ppm	0-50ppm		-15°C / 5°F	40°C / 104°F
N	Nitrogen Dioxide	0-10ppm			-15°C / 5°F	40°C / 104°F
A	Ammonia	0-50ppm	0-1000ppm		-20°C / -4°F	40°C / 104°F

+ SureCell™ Sensing Technology

#Standard range

*Check certified temperature

Construction

Electrical	**Flammable (0-100%LEL)** 3 wire mV bridge 2.9-3.5V, 0.7W 200mA constant current	**Toxic & Oxygen** 2 wire loop powered 4-20mA (plus screen) 16-30Vdc, 0.9W	**Junction Box** Earth continuity plate BK4 terminal block (4 way) 4 x 0.5mm² (20AWG) to 2.5mm² (14AWG) 1 x M20, 1 x 3/4" NPT, 1x1/2" NPT
Material	Polyphenylene Sulfide (PPS)	Polyphenylene Sulfide (PPS)	Fire retardant GFP
Weight	190g	185g (205g oxygen)	600g
Certification	Ex II 2 G D EExd IIC T6 T85 Deg C T_{amb} = -55°C to +55°C BAS98ATEX2156X SIRA03ATEX1116X (Performance)	Ex II 2 G D EExd ia IIC T4 T135 Deg C T_{amb} = -55°C to +65°C BAS98ATEX2157X	Ex II 2 G D EExe II T6 T85 Deg C T_{amb} = -40°C to +50°C SIRA04ATEX3018
Applicable Standards	This product complies with the relevant CE standards including: EMC to EN50270, Flammable to EN50054, Toxic to EN445544 (H_2S only)		

Environmental	
IP Rating	IP65 standard, IP66 with weather protection in accordance with EN60529:1992
Operating Temperature	Dependent upon gas type and certification
Operating Humidity Range	Continuous: 20-90%RH (non condensing), Intermittent: 10-99%RH (non condensing)
Operating Pressure	90-110kPa
Storage Conditions	Instrument -40°C to +50°C (-40°F to +122°F)

* Oxygen detection products must only be used to detect oxygen depletion in air.

Ordering Information

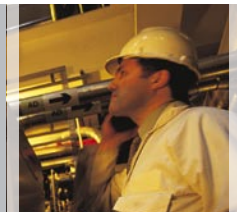

Ordering Information

e.g. SPSTAX H 1 = SPSTXXH1

GAS TYPE	RANGE
F Flammable	**1** Refer to
O Oxygen	**2** Detectable Gases
C Carbon Monoxide	**3** Table Above
H Hydrogen Sulfide	
G Hydrogen	
L Chlorine	
S Sulfur Dioxide	
N Nitrogen Dioxide	

Standard Supply	Each detector is supplied complete with junction box, multiple cable entries, earth continuity plate, hinged lid and instruction leaflet, all sealed in a plastic bag inside a shipping carton	
Shipping Details	Shipping carton dimensions: L160mm (6.3") x W215mm (8.5") x 80mm (3.1") Approximate weight: 800g	
Optional Accessories	02000-A-1645	Calibration gas flow housing (for flammable & toxic)
	00780-A-0160	Right angle mounting bracket for ceiling mounting
	02000-A-1640	Weather Housing for use with flammable detector including remote gassing nozzle
	02000-A-1635	Weather Housing for use with toxic/oxygen detector including remote gassing nozzle
	02000-A-1642	Collecting cone for use with flammable detector
Calibration Equipment	Contact Honeywell Analytics Representative	

As World leaders in gas detection solutions, Honeywell Analytics' Zareba range of gas detection systems has been designed to provide efficient, practical and cost-effective equipment to protect people from a variety of forms of hazardous gas. The equipment is also simple to install and easy to operate and maintain.

The Zareba range of fixed gas detection

Sensepoint

Sensepoint Plus

Sensepoint Pro

Touchpoint 1

Touchpoint 4

Sensepoint range
Designed for industrial use, the Sensepoint range provides an easy way of ensuring legislative requirements are met.

Touchpoint
Designed for industrial use, the Touchpoint range provides an easy way of ensuring legislative requirements are met. It is particularly suited where a number of small, discrete, stand-alone systems are required.

Metro

Metro controller

Metro
For commercial environments such as car parks, municipal buildings and retail facilities, Metro offers a fully programmable, addressable gas detection system.

Unipoint

Unipoint is a simple DIN rail mounted controller offering integrators a flexible and low cost solution to incorporate flammable, toxic or oxygen gas detection into their control systems. From car parks and boiler houses to analyzer shelters or crane cabs in offshore facilities.

Find out more
www.honeywellanalytics.com

Customer business centre
Europe and the rest of the world
Honeywell Analytics AG
Wilstrasse 11-U11
CH-8610 Uster
Switzerland
Tel: +41 (0)44 943 4300
Fax: +41 (0)44 943 4398
sales@zelana.co.uk

Customer business center
Americas
Honeywell Analytics Distribution, Inc.
400 Sawgrass Corporate Pkwy
Suite 100
Sunrise, FL 33325
USA
Tel: +1 954 514 2700
Toll free: +1 800 538 0363
Fax: +1 954 514 2784
sales@zelana.com

www.honeywell.com

Please Note:
While every effort has been made to ensure accuracy in this publication, no responsibility can be accepted for errors or omissions. Data may change, as well as legislation, and you are strongly advised to obtain copies of the most recently issued regulations, standards, and guidelines. This publication is not intended to form the basis of a contract.
© 2005 Honeywell Analytics

H_Sensepoint_DS0326_V1
09/05

© 2005 Honeywell Analytics

Honeywell

10720